BX1768

2025-2027 Chevy Suburban/Tahoe (4WD/Gas) (No Z71) (Includes ACC & Top Shutters Only) 2025-2027 Chevy Suburban/Tahoe (4WD/Diesel) (No Z71) (Includes ACC, Turbo & Shutters) Installation Instructions

If the listed fit information for this baseplate does not include the year/make/model/features of your vehicle, please contact us at (402) 385-3051 to verify.

Please read BOTH these Installation Instructions and the General Information sheet prior to installing or operating this equipment.

Serial Number

1. Blue Ox® towing products and accessories are intended to be installed by Blue Ox® Dealers who are familiar with our products and have the equipment and knowledge necessary to do "fit work". If needed, Blue Ox® Dealers can be found at www.blueox.com or by contacting our Customer Care Department at (402) 385-3051.
2. Many Blue Ox® baseplates are designed to use existing holes and hardware to mount the baseplate to the towed vehicle. Even though bolts are there, do not assume they are adequate for baseplate mounting. Always use the hardware supplied in the hardware kit and existing hardware as specified in the installation instructions.

If the front of your vehicle looks different than this, please contact us at (402) 385-3051.

Reference your vehicle owner's manual for manufacturer's towing specifications.

Attachment Tab Height: 19.75"

Attachment Tab Width: 21.75"

Please ensure tow bar being used is compatible with the baseplate tab width.

Bolt Torque Specifications
Torque in Foot-Pounds for Inch Bolts

Bolt Size	Grade 5	Grade 8
1/4"	10	14
5/16"	19	29
3/8"	33	47
7/16"	54	78
1/2"	78	119
5/8"	154	230
3/4"	257	380

Bolt Torque Specifications
Torque in Foot-Pounds for Metric Bolts

Bolt Size	Grade 8.8	Grade 10.9
6MM	6	8
8MM	16	22
10MM	31	40
12MM	54	70
14MM	89	117
16MM	161	230
18MM	222	318

WARNING

Failure to read and follow these instructions could result in separation of the towed vehicle from the tow bar, causing property damage, loss of towed vehicle, personal injury or death.

Instruction Notes: The fascia, fascia cover, bumper, and adaptive cruise control bracket are removed and reinstalled for the baseplate installation. Some drilling and trimming is required.

Place all components that are removed on a flat, sturdy surface. All items will be reinstalled unless otherwise noted after the baseplate is installed.

The dimensional variations between otherwise identical vehicles can be considerable. While the baseplate was designed for easy installation, it may be necessary to tailor the baseplate slightly to compensate for vehicle manufacturer's tolerances.

At this time a Light Bar is recommended for this vehicle.

NOTICE

- Handling of some cosmetic parts when installing this product may require the use of protective covers, rags, specialty tools, etc. to prevent damage.
- When using power drills be aware of the dangers of torque and drill bit length.
- When using a reciprocating saw be aware of objects behind the cutting surface.
- Use a good quality paint to spray cut edges of frame to prevent rusting.
- Be sure that **ALL** electrical connections are plugged in and accessories are functioning properly before reinstalling the fascia.
- The baseplate is computer tested to your vehicle's GVWR, exceeding this weight will void the manufacturer's warranty.
- Be sure to use a sufficient amount of Loctite® Red on all bolt threads before tightening. Tighten all bolts according to the torque chart provided unless specified.
- Dealer or installer be certain the user receives these instruction sheets.
- If the baseplate is in an accident, it must be replaced. **DO NOT** use it again! An accident can cause unseen damage and using it again could result in more damage or serious injury. **DO NOT** use the baseplate if it is damaged or missing parts.

BX1768

2025-2027 Chevy Suburban/Tahoe (4WD/Gas) (No Z71) (Includes ACC & Top Shutters Only)
2025-2027 Chevy Suburban/Tahoe (4WD/Diesel) (No Z71) (Includes ACC, Turbo, & Shutters)
Installation Instructions

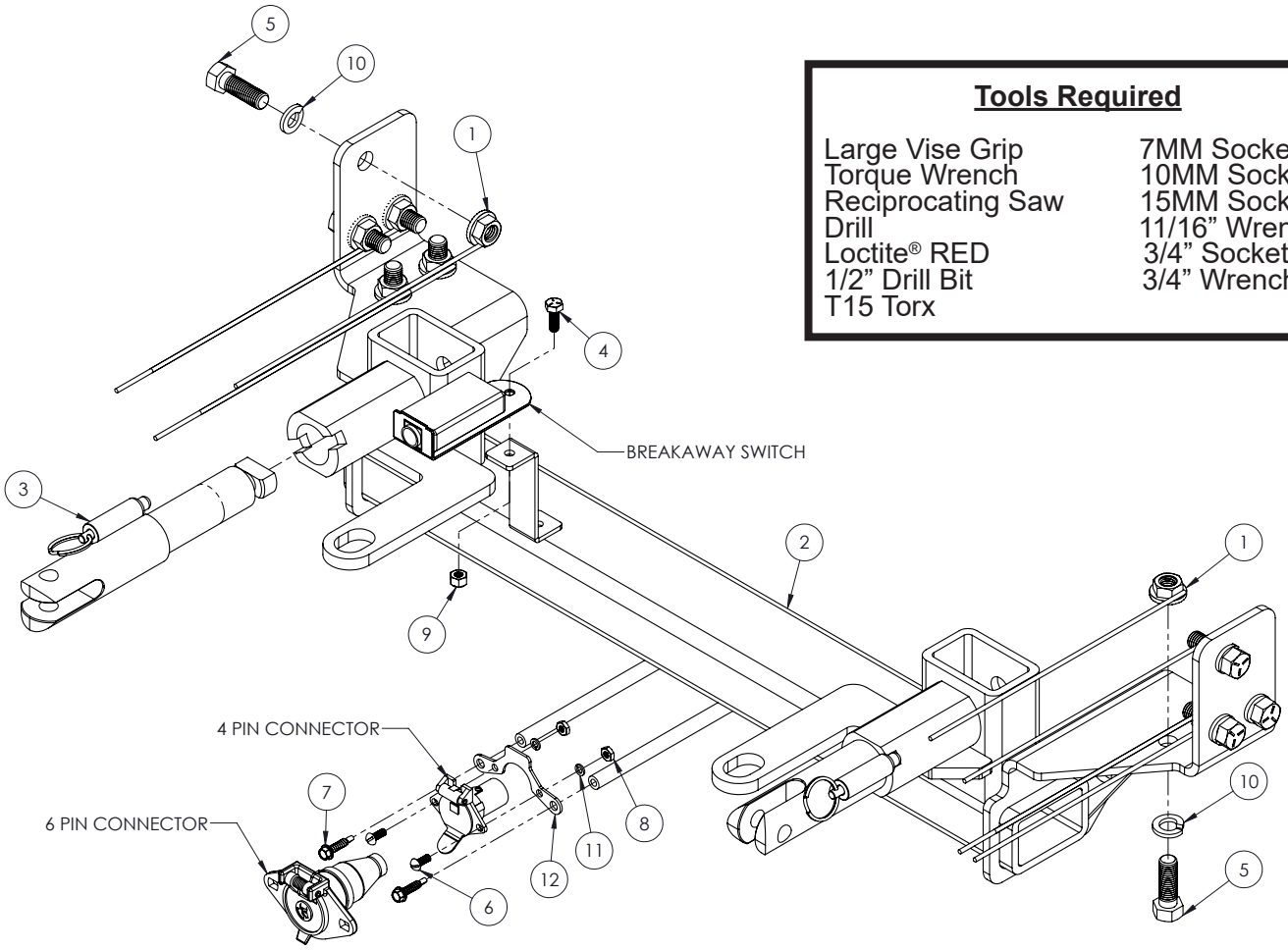

Tools Required

Large Vise Grip	7MM Socket
Torque Wrench	10MM Socket
Reciprocating Saw	15MM Socket
Drill	11/16” Wrench
Loctite® RED	3/4” Socket
1/2” Drill Bit	3/4” Wrench
T15 Torx	

Item No.	Part No.	Description	Qty.
1	61-4029	1/2” Whiz Nut w/ 10” Wire	10
2	61-8773	BX1768 Baseplate	1
3	62-3469	Attachment Tab Assembly with Hole	2
4	201-0050	1/4”-20 x 3/4” Hex Head Bolt, Grade 5, ZP	1
5	201-0051	1/2”-13 x 1-1/2” Hex Head Bolt, Grade 5	10
6	201-0192	#10-32 1/2” Round Slotted Head Screw	2
7	201-0979	#12-14 x 1” Self Drilling Screw, ZP	2
8	202-0047	#10-32 Hex Nut	2
9	202-0102	1/4”-20 Hex Nylon Nut, ZP	1
10	203-0012	1/2” Lock Washer, ZP	10
11	203-0054	#10 Lock Washer, ZP	2
12	299-0685	Electrical Bracket	1
13	226-0049(not shown)	Class III Safety Cables	2
14	229-0512(not shown)	3/8” Quicklink, ZP	2
15	290-0275(not shown)	8” Nylon Cable Tie	2
16	290-0437(not shown)	Black Cap Plug Receiver	2

Important:

Use only genuine factory replacement parts on your baseplate. Do **NOT** substitute homemade or non-typical parts. If a bolt is lost or in need of replacement, for your safety and the preservation of your baseplate, be sure to use a replacement bolt of the same grade (In most cases it will be Grade 5, please reference the parts list above). Replacement parts may be ordered through your nearest Blue Ox® Dealer or Distributor. Failing to follow and/or altering these installation instructions in either installation or required equipment will void the manufacturer’s warranty. Towing behind a non-motorized vehicle will void the warranty.

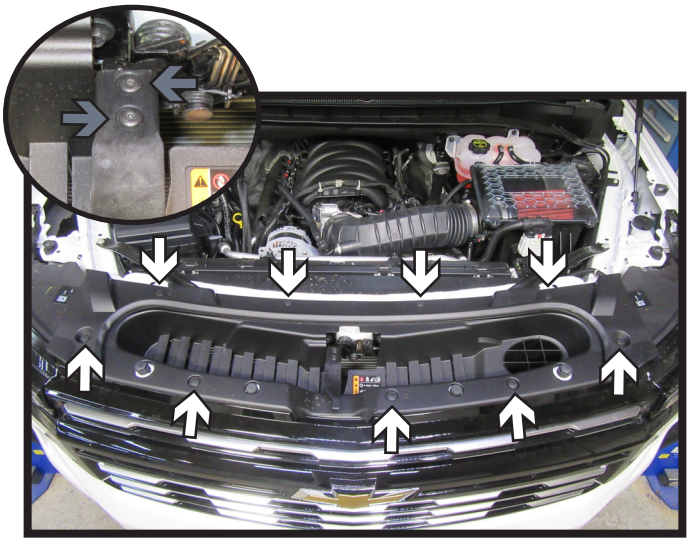

1. Remove the nine (9) push pins (white) from the fascia cover. Then using a T15 Torx, remove the two (2) screws from the hood latch handle (inset gray). Set aside the facia cover and hood latch handle to be re-installed later.

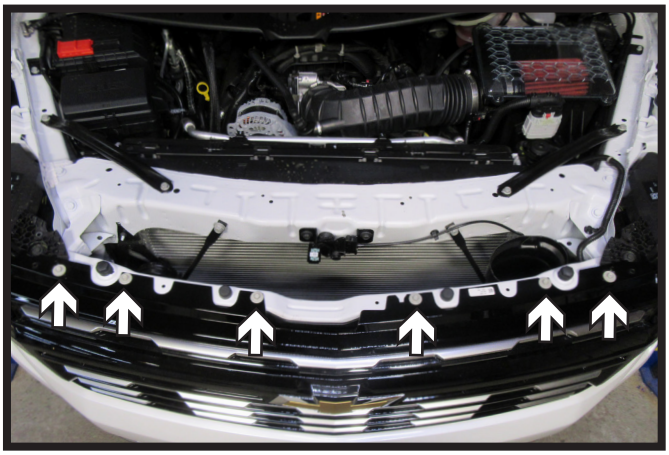

2. Using a 10MM socket, remove the six (6) bolts from the top of the fascia.

3. Using a T15 Torx, remove the six (6) bolts from the wheel well edge. Do this on both sides of the vehicle.

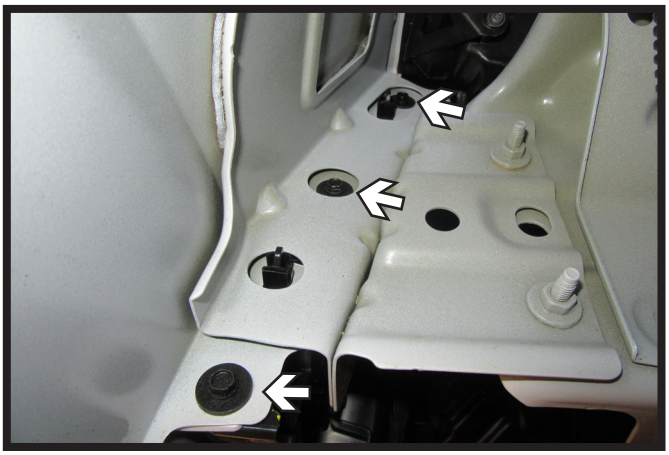

4. Pull back the wheel well liner. Using a 7MM socket, remove the three (3) bolts from the fascia joint. Do this on both sides of the vehicle.

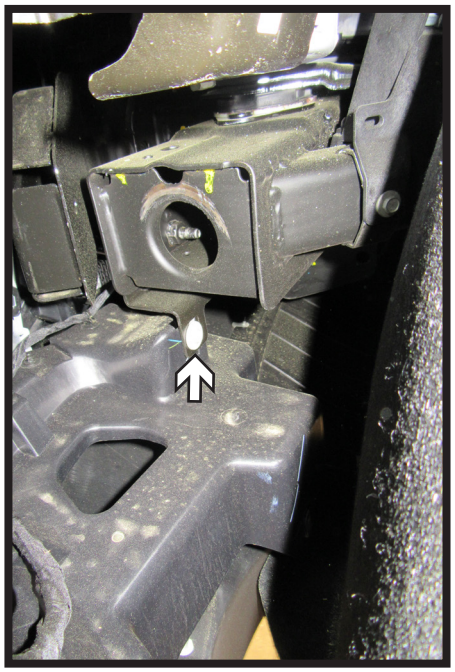

5. Pull back the wheel well liner. Using a 10MM socket, remove the one (1) bolt behind the fascia in front of the tire. Do this on both sides of the vehicle.

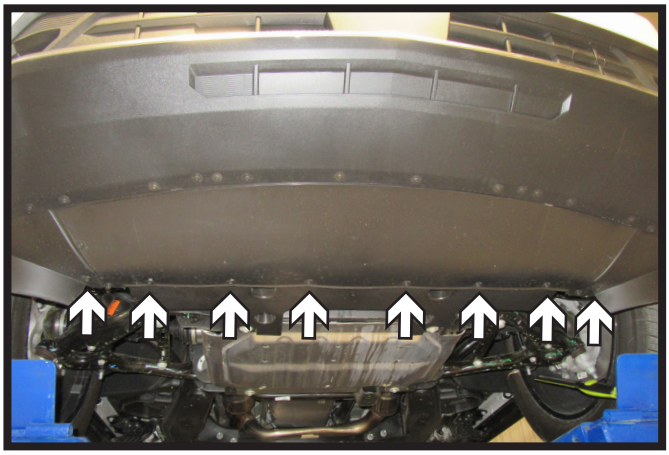

6. Using a 7MM socket, remove the eight (8) bolts from the bottom of the fascia.

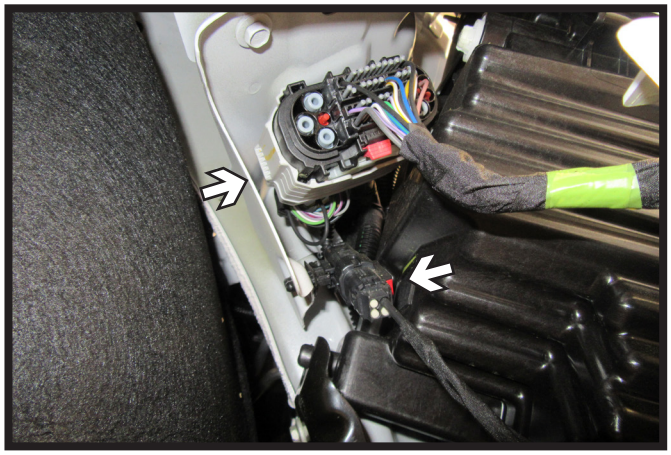

7a. **Gas Models**: As the fascia is removed, unplug the two (2) electrical connections on the passenger side. Remove fascia and set aside to be reinstalled later.

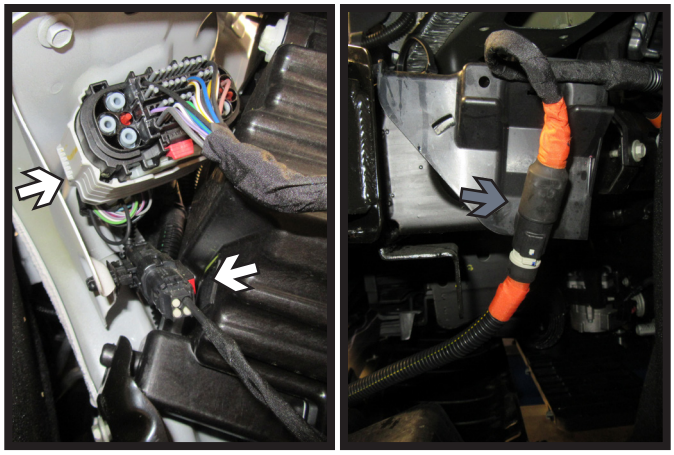

7b. **Diesel Models**: As the fascia is removed, unplug the two (2) electrical connections on the passenger side (white) and one (1) electrical connection on the driver side (gray). Remove fascia and set aside to be reinstalled later.

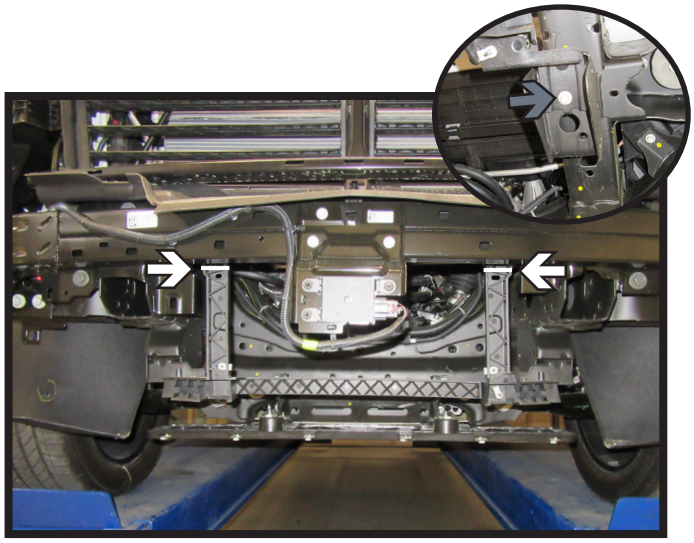

8. **Gas Models**: Using a reciprocating saw, cut the top of the plastic piece on each side as indicated. Then using a 10MM socket, remove the two (2) bolts, one (1) on each side, from the bottom of the plastic piece (inset). Remove plastic piece, it will not be reinstalled.

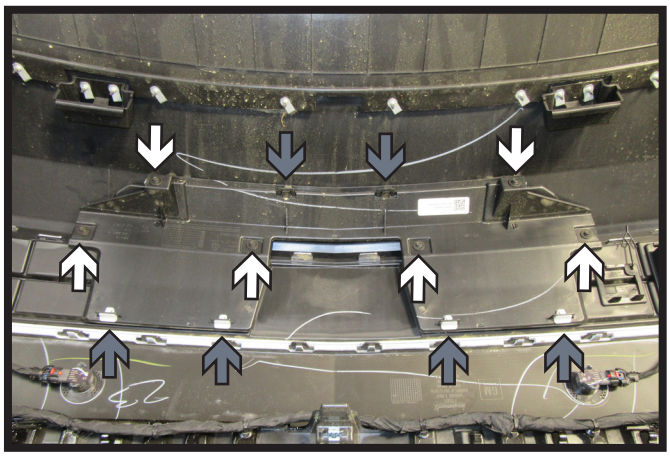

9. **Gas Models**: Using a 7MM socket, remove the six (6) bolts (white) from the cover on the back side of the fascia. Then remove the six (6) clips (gray). Remove cover from back of fascia, it will not be reinstalled.

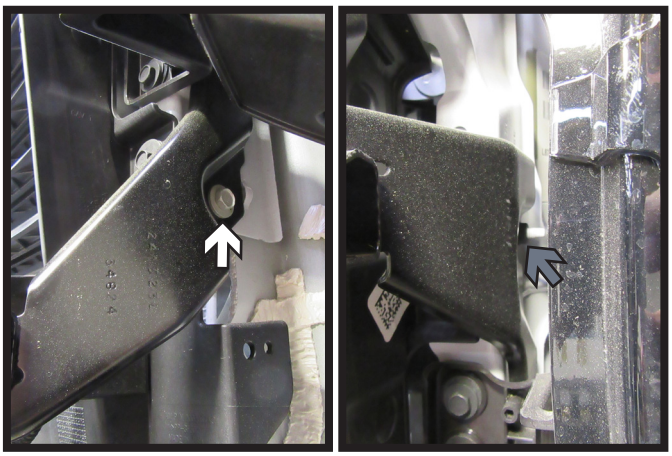

10. Using a 10MM socket, remove the bottom bolt (white) and loosen the top nut (gray) from the upper shutter housing. Do this on both sides of the vehicle.

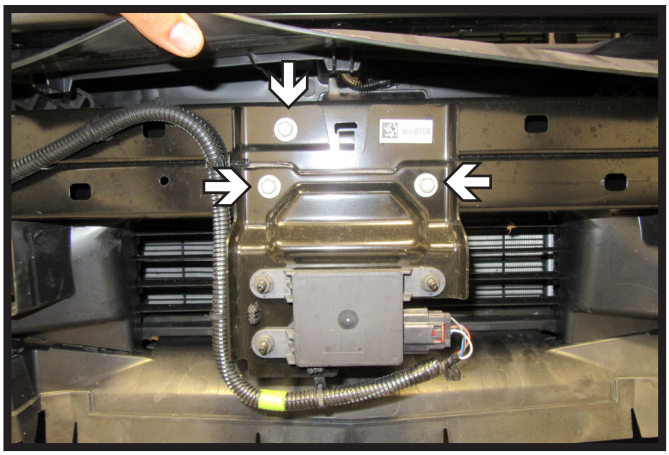

11. Using a 10MM socket, remove the three (3) bolts attaching the adaptive cruise control (ACC) bracket to the bumper. Unclip wire loom from the bumper. Set ACC sensor with bracket out of the way for baseplate installation.
Note: DO NOT unplug ACC sensor.

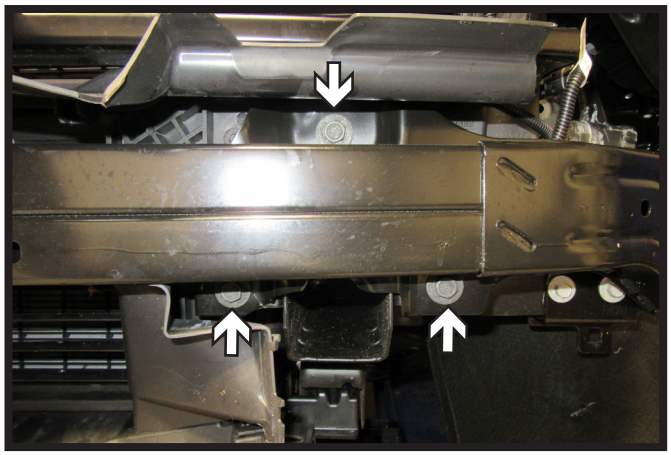

12. Using a 15MM socket, remove the six (6) bolts, three (3) on each side from the bumper. Unclip wire loom on driver side of the bumper if present. Remove bumper and set aside to be reinstalled later.

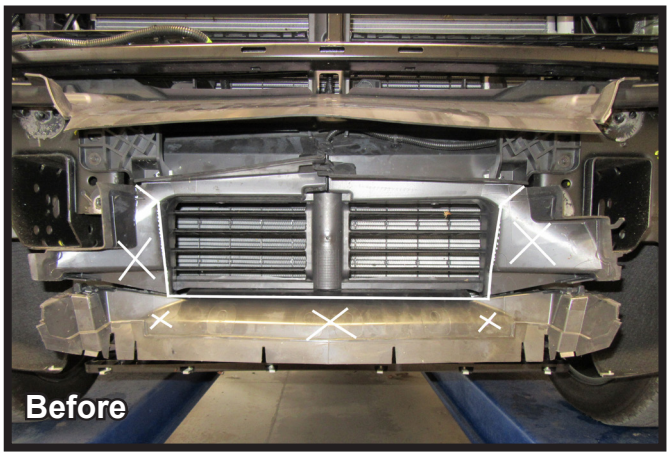

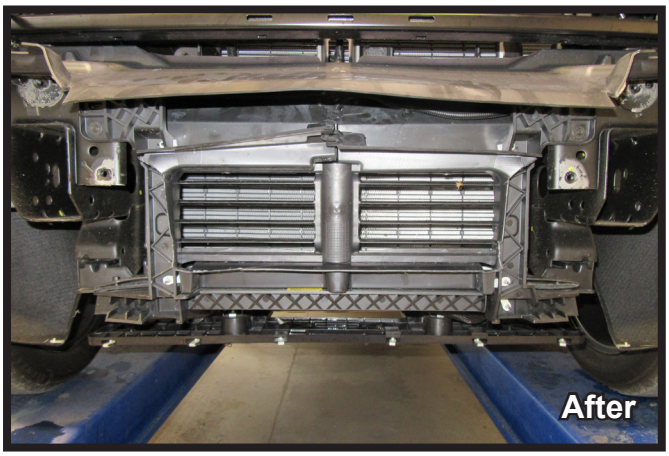

13. **Diesel Models**: Using a reciprocating saw, trim the rubber shroud around the lower shutters as shown to allow for baseplate clearance.

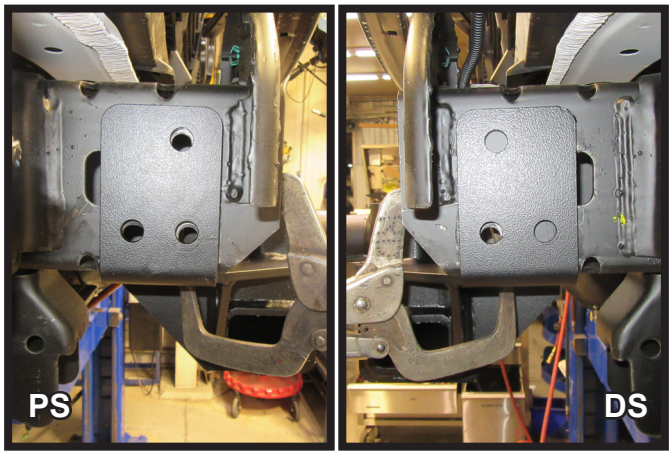

14. Slide the baseplate onto the vehicle and line up the holes of the baseplate as closely as possible to the existing holes in the frame. Clamp in place using large vise grips.

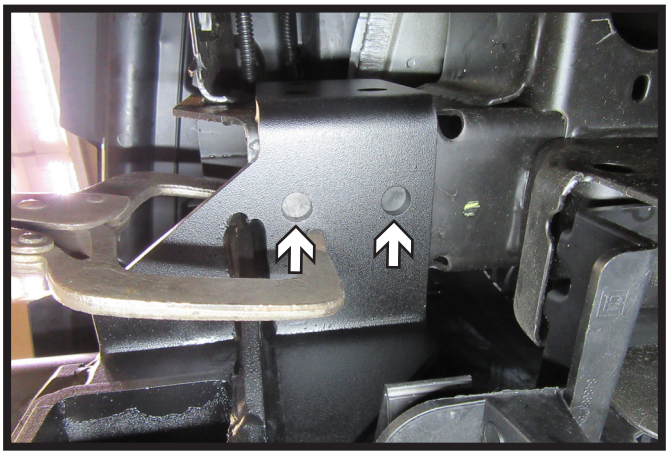

15. Using a 1/2” drill bit, drill out the bottom two (2) holes in the frame using the baseplate as a template. Insert two (2) 1/2” bolts with lock washers and whiz nuts. Do this on both sides of the vehicle.

**** Use Loctite® Red on all bolt threads and tighten all bolts to the appropriate torque. ****

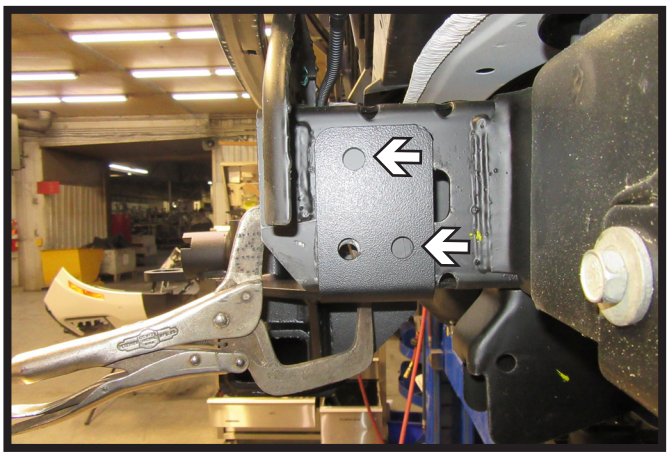

16. Using a 1/2” drill bit, drill out the driver side holes in the frame using the baseplate as a template. Then ream out the existing holes on both side of the vehicle using a 1/2” drill bit.

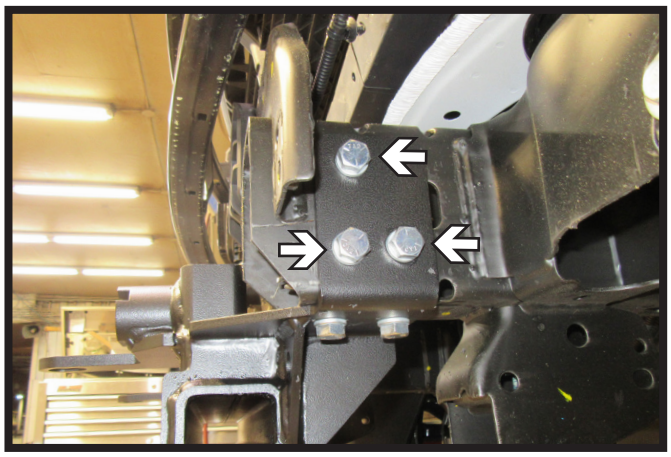

17. Insert three (3) 1/2” bolts with lock washers and whiz nuts. Do this on both sides of the vehicle.

**** Use Loctite® Red on all bolt threads and tighten all bolts to the appropriate torque. ****

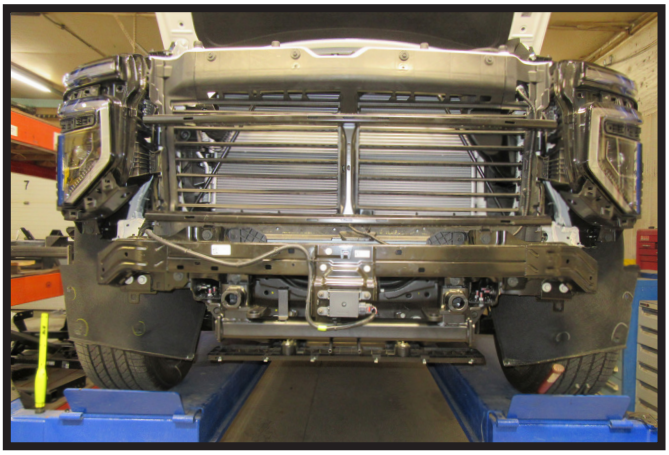

18. Reinstall bumper. Reattach the ACC bracket and wire loom(s) to the bumper.

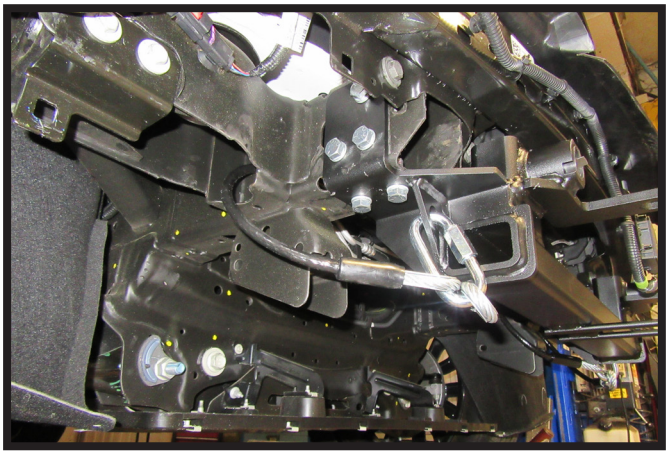

19. Attach the permanent baseplate safety cables to the provided convenience link on the baseplate. The photo above shows the recommended installation of the cables to frame of vehicle. Additional options may interfere with suggested mounting; in this case, secure the cables to a solid piece of the frame as described in the General Information sheet. Be sure the safety cables do not rub against any hoses or moving parts. Do this on **BOTH** sides of the vehicle.

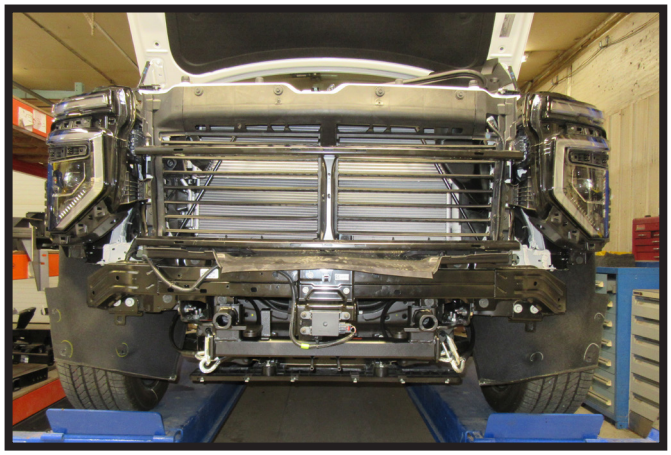

20. Reinstall bottom bolts and tighten upper nuts on top shutter housing.

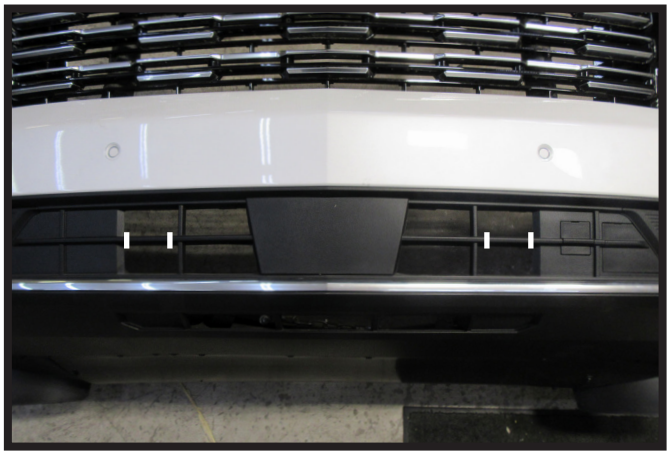

21. Using a reciprocating saw, trim the indicated areas of the fascia to allow clearance for the attachment tabs and convenience links.

22. Reinstall the fascia, fascia cover, and hood latch handle. Reconnect all electrical connections.

CUSTOMER SERVICE COMMITMENT

Blue Ox® is committed to providing you with exceptional customer care throughout your lifetime with our products. Our team is here to assist you with any questions you may have regarding the performance of your product. Simply call (402) 385-3051 and you can speak with our customer service team.

Additionally, please visit our website to see which rallies our team will be attending. For a nominal fee, our service technician will service your towing system to ensure it's in proper working condition. Also, as a commitment to our customers, should you visit our factory, you can stay at our full service Blue Ox® campground at no charge along with enjoying a factory tour.

Again, thank you for being our customer and for the confidence you have shown in the performance of our products. It is because of customers like you we enjoy the success we have today.

© 2024 Blue Ox
One Mill Road, Industrial Park
Pender, Nebraska 68047
Phone: (402) 385-3051
Fax: (402) 385-3360
www.blueox.com

General Information

1. Ensure that your product(s) are registered online at www.blueox.com. It is crucial to register your product(s) so that you may be alerted of product offerings, updates, upgrades, maintenance and safety bulletins, and/or recalls.
2. **It is the owner's responsibility to inspect all towing equipment for cracked welds, missing or worn parts and loose bolts before each towing trip.** Be sure to use Loctite® Red on all bolts and tighten to the recommended specifications.
3. **It is the owner's responsibility to hook up all towing equipment per manufacturer's instructions/recommendations.**
4. Remove the attachment tabs when not in use (if applicable).

Notice To Baseplate Installer

1. **It is YOUR responsibility to watch for:**
   - Oil cooler and air conditioner lines
   - Electrical wires and hoses
   - Missing parts or attaching points on the frame

   ** If the baseplate is improperly installed and is against a wire or hose, it could cause fluid leaks or electrical shorts some time after the actual baseplate installation.

Permanent Baseplate Safety Cable Installation

Permanent baseplate safety cables are strongly recommended when towing a vehicle with a tow bar. The principle function of the permanent baseplate safety cables is to prevent the towed vehicle from breaking loose in the event the connection between the frame of the towed vehicle and the baseplate fails or becomes disconnected. The cables must be connected from the baseplate to the frame rail or cross member of the vehicle's frame. The illustrations below show the possible arrangements recommended by Blue Ox®. Each permanent baseplate safety cable must have an adequate weight rating for the towing system. The weight rating of the two (2) cables together will not qualify.

Do not mount the permanent baseplate safety cables against wires, hoses or brake lines.

These permanent baseplate safety cables should remain installed as long as the baseplate is installed on the vehicle. Permanent baseplate safety cables are to be used in conjunction with, and NOT a replacement for legally required safety cables attaching the towed vehicle to the towing vehicle.

Option #1

(Baseplates with Convenience Link Tabs)

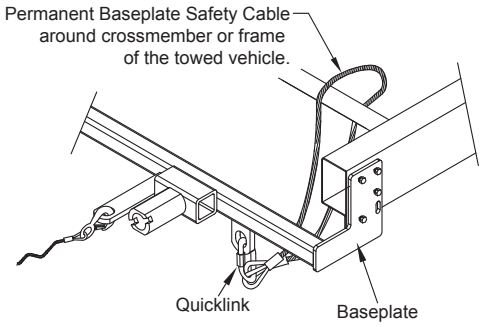

Option #2

(Baseplates with out Convenience Link Tabs)

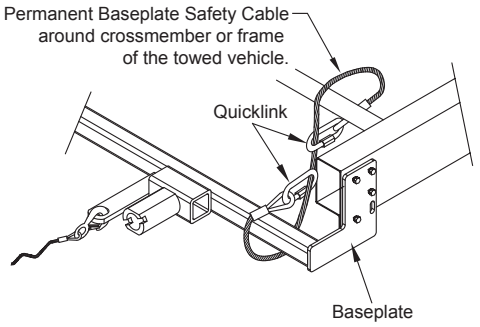

BLUE OX ORIGINAL PURCHASERS THREE YEAR LIMITED WARRANTY

Automatic Equipment Manufacturing Company (“Automatic”) warrants to the original (first) retail purchaser that this product, manufactured by Automatic, shall be free from defect in material and workmanship under normal use and service for a period of three years from the date of delivery.

During said three-year period, Automatic will repair or replace any parts that have been returned by the original purchaser, to the factory, transportation prepaid, and in Automatic’s sole and absolute opinion found to be defective.

Limitations on Warranty Coverage:

Coverage under this warranty will be valid only if the customer warranty card is returned by the original purchaser within 30 days of purchase.

Coverage under this warranty will be effective only when a copy of the original invoice, showing date and place of purchase, accompanies any claim for warranty. This warranty is NON TRANSFERABLE.

This limited warranty will not cover, in any way or form, any alleged damages caused by incorrect or improper installation, improper use, modification or neglect of product, failure to properly service and maintain, misuse, act of God, accident or failure of the user to follow guidelines contained in the instructional material provided by Automatic.

This warranty does not cover normal wear and tear, paint or rust.

Warrantor assumes no responsibility to the owner for loss of use of product, loss of time, inconvenience or any other damage consequential or otherwise. Including, but not limited to mileage, expense of transporting of product, return shipping expense, mechanics travel time, telephone, road service, towing, and rental during repairs, travel, lodging, loss or damage to personal property or loss of earnings.

REPAIR OR REPLACEMENT AS SET FORTH IN THIS LIMITED WARRANTY IS THE SOLE EXCLUSIVE REMEDY OF THE PURCHASER. AUTOMATIC SHALL NOT BE LIABLE FOR ANY INCIDENTAL OR CONSEQUENTIAL DAMAGES FOR BREACH OF ANY EXPRESS OR IMPLIED WARRANTY ON THIS PRODUCT. EXCEPT TO THE EXTENT PROHIBITED BY APPLICABLE LAW, ANY IMPLIED WARRANTY OF MERCHANTABILITY OR FITNESS FOR A PARTICULAR PURPOSE ON THIS PRODUCT IS LIMITED IN LENGTH TO THE DURATION OF THIS WARRANTY.

Please visit http://blueox.com/warranty/ to register your warranty

BLUE OX